"BG3000" BELTIT MOTOR FOR MLBG & HDBG
PNEUMATIC "ADVANCED" AND "HEAVY DUTY" BELTITS

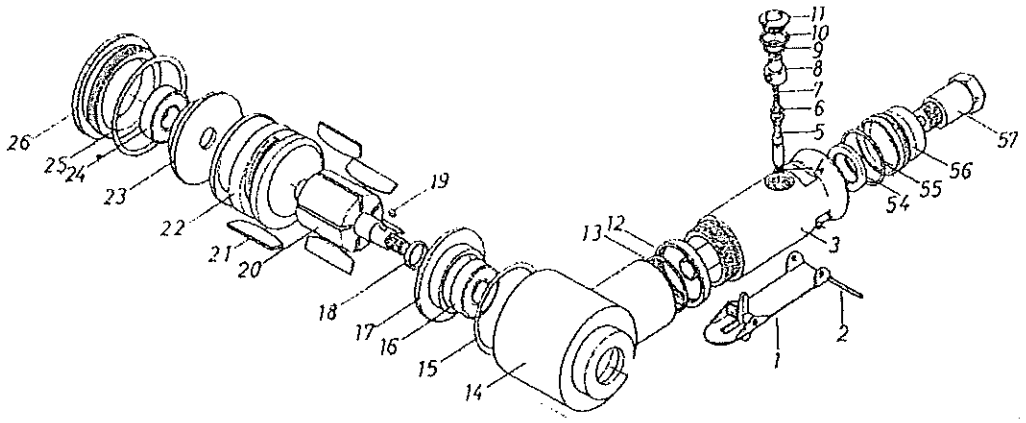

No.	Part No.	Description	Qty.	No.	Part No.	Description	Qty.
1	730001	Throttle Lever	1	18	730018	Spacer	1
2	730002	Lever Pin	1	19	730019	Key	1
3	730003	Motor Housing	1	20	730020	Rotor	1
4	730004	O-Ring	1	21	730021	Rotor Blade	5
5	730005	Valve Stem	1	22	730022	Cylinder	1
6	730006	O-Ring	1	23	730023	Rear End Plate	1
7	730007	Valve Spring	1	24	730024	Ball Bearing	1
8	730008	Air Controller	1	25	730025	O-Ring	1
9	730009	O-Ring	1	26	730026	Motor Nut	1
10	730010	O-Ring	1	35	730035	Lock Screw	1
11	730011	Valve Screw	1	36	730036	Washer	1
12	730012	Lock Nut	1	54	730054	Silencer	1
13	730013	O-Ring	1	55	730055	O-Ring	1
14	730014	Housing	1	56	730056	Air Deflector	1
15	730015	O-Ring	1	57	730057	Air Inlet	1
16	730016	Ball Bearing	1		51222A	Drive Wheel	1
17	730017	Front End Plate	1				1

MECHANISM BODY FOR BELTIT MK3 SD AND MK3 ML AND THEIR VA VERSIONS

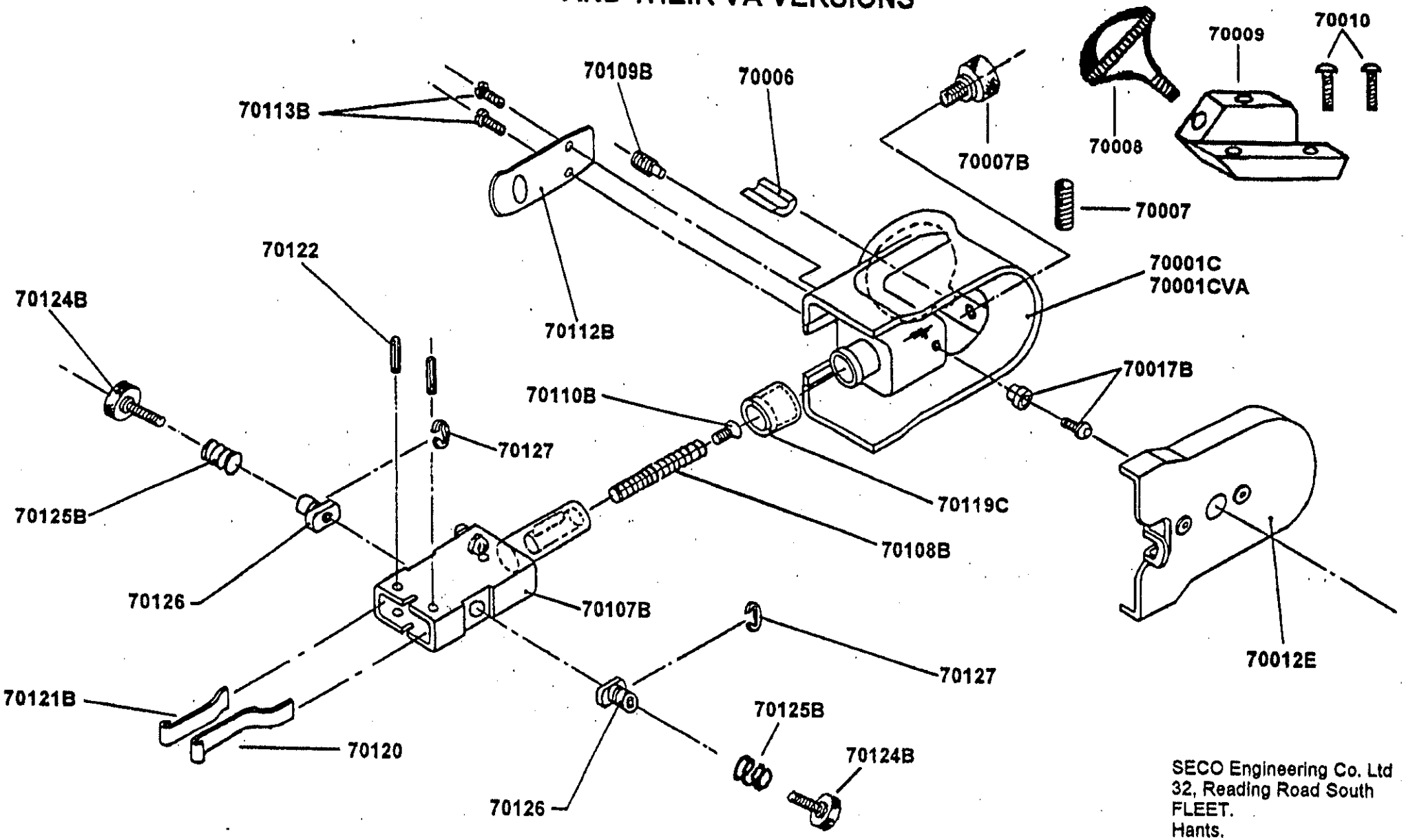

SECO Engineering Co. Ltd
32, Reading Road South
FLEET.
Hants.
GU13 9QL
Tel: 01252 622 333
Fax. 01252 623 888

BELTIT MECHANISM BODY PARTS

FOR MK3 SD AND MK3 ML
PNEUMATIC, ELECTRIC
AND THEIR VA VERSIONS

DESCRIPTION	No. per tool	PNEUMATIC	ELECTRIC
Machine housing with inserts	1	70001C	70001CE
Machine housing with inserts (VA)	1	70001CVA	70001CEVA
Machine housing complete with mechanism	1	70001CA	70001CEA
Machine housing complete with mechanism (VA)	1	70001CAVA	70001CEAVA
Locking D piece	1	70006	70006
Locking D piece knob or screw	1	70007B	70007
Locking D piece screw (VA)	1	70007	70007
Knob	1	70008	70008
Knob bracket	1	70009	70009
Knob bracket screws	2	70010	70010
Inserts for machine housing (not shown)	2	700011	70011
Cover with catch	1	700012E	700012E
Cover locking post, screw & washer	1	70017	70017
Head and main shaft assembly, complete with leaf springs etc	1	70107B	70107B
Spring - main	1	70108B	70108B
Shaft limiting screw	1	70109B	70109B
Spring end screw	1	70110B	70110B
Hold back spring	1	70112B	70112B
Hold back spring screws	1	70113B	70113B
Shaft seal	1	70119C	70119C
Spring - left	1	70120	70120
Spring - right	1	70121B	70121B
Spring pins	2	70122	70122
Tracking knob	1	70124	70124
Tracking knob spring	1	70125	70125
Tracking knob boss	1	70126	70126
Tracking knob boss circlip	1	70127	70127
Arm locking screw	1	70124B	70124B
Arm locking screw spring	1	70125B	70125B
Dust shute for 533mm long belts (not shown) VA	1	70132VA	70132VA
Dust shute for 610mm long belts (not shown) VA	1	70133VA	70133VA
Dust shute screws to machine housing (not shown)	2	70134VA	70134VA